Tiecheng Information Technology Co., Ltd
5/F, A, No.108 Xiangyuan Rd, Gongshu District, Hangzhou 310015, China

Specification Manual

Model：HK-LF-115-58

(also known as HK-LF-108-60)

Name：6.6KW On-board

Charger Version：V1.0

Issue Date：2021.1

Tiecheng Information Technology Co., Ltd

Version	Update	Edit	Audit	Approval	Date
V1.0	Draft	Tianxiang Pan	Lizhen Tang	Hongbin Zhang	2021.1.1

Content

1 Overview 4
1.1 Subject.....4
1.2 Main features 4
2 Charger technical specification 4
2.1 Environmental requirement 4
2.2 Charger regulatory requirements and reference standards.....5
3 Charger safety regulations 6
4 Charger electrical performance 6
4.1 Input Performance 6
4.2 Output Performance 6
4.3 Low voltage output performance 7
4.4 Control Interface.....7
4.5 Other 7
5 Protection functions 8
6 Function Block Diagram 8
7 Control Interface 8
7.1 Low voltage connector and pins definition 9
7.1.1Connector pins definition 9
7.2 High voltage connector and pins definition 10
7.2.1AC input connector 10
7.2.2DC output connector Input connector.....10
8 Software Requirement.....11
9 Mechanical Requirements 11
9.1 Size and weight 11
9.2 Appearance.....11
9.3 Appearance Requirements 11
10 Installation Size 12
11 Installation Requirement.....12
12 Nameplate, Package, Transport and Storage 13
12.1 Nameplate.....13
12.2 Package.....13
12.3 Transportation.....13
12.4 Storage.....14
12.5 Safe Guide.....14

1. Overview

1.1 Subject

HK-LF full-sealed on-board OBC is a product specially designed for new energy vehicle by Tiecheng Information Technology Co., Ltd according to China standard QC/T895-2011 Conductive On-board Charger for Electric Vehicle, which function is as the battery charger of new energy vehicle This product not only have the advantages of high efficiency, small size, high stability, long-lifetime but also have the performance of high protection level, high reliability, more protection functions, it is a ideal power supply solution for electrical vehicle. Thermal sensor is built-in the charger, has the function of over-temperature and can auto-recovery when temperature decreased. With the process of full-sealing, achieve the protection level of IP67, which make sure the excellent working under the complicated operation condition.

1.2 Main Features

1.2.1 Support UDS diagnosis, with CAN wake-up function

1.2.2 Full-sealed process, can reliably work in the temperature of -40℃~60℃

1.2.3 Built-in thermal sensor, shut off when temperature up to 90℃

1.2.4 Protection level with IP67

2. Charger Technical Specification

2.1 Environmental Specification

▲Working environmental temperature

Area	Lowest Temperature	Highest Temperature
Global	-40℃	60℃

▲Storage environmental temperature

Area	Lowest Temperature	Highest Temperature
Global	-40℃	105℃

▲Humidity：relative humidity 5%~95%，no condensation

▲Altitude：≤5000m

▲Working noisy：max when working ≤65dB，meet China standard QTC 895-2011

2.2 Charger regulatory requirements and reference standards

The design and manufacture of this product must meet the related requirements of vehicle which applicable regulations and standards in China, reference standards as following:

No.	Standard Code	Standard Name	Remark
1	QC/T 895-2011	Conductive on-board charger of electrical vehicle	/
2	GB/T 30512-2014	Prohibited substances requirement	/
3	GB/T 18387-2008	Limits and measurement methods for electromagnetic field emission intensity of electric vehicles, broadband, 9kHz~30MHz	/
4	GB/T 18384-2015	Safety requirements of electrical vehicle	/
5	GB/T 18487-2015	Electric vehicle conductive charging system	/
6	GB/T 28382-2012	Technical specifications for all-electric passenger vehicles	/
7	GB/T 14023-2011	Limits and methods of measurement for radio disturbance characteristics of vehicles, ships and installations driven by internal combustion engines	/
23	GB/T 18655-2018	EMC technical requirements for electronic components and subsystems of passenger vehicles	/
24	GB/T 18655-2010	Limits and measurement methods for the radio disturbance characteristics of vehicles, ships and internal combustion engines used to protect vehicle-mounted receivers	/

3. Charger Safety Regulations Specification

	Condition	Requirement
Grounding resistance test	@25A/AC	≤100mΩ
Input insulation test	@1000V/DC	≥20MΩ
Output insulation test	@1000V/DC	≥20MΩ
Input withstand test	@2000V/AC 1min	Leak current≤15ma
Output withstand test	@2000V/AC 1min	Leak current≤10ma
Input to Output withstand test	@2000V/AC 1min	Leak current≤10ma

4. Charger Electrical Performance

4.1 Input

Input	Input voltage range	AC 90~265V
	Frequency	47~63Hz
	Input Current	≤32A
	Power Factor	≥0.98 @ ≥3300W
	Efficiency	≥93% full loading
	Stand-by power consumption	≤5W
	Starting inrush current	≤48A

4.2 Output

Nominal Voltage Platform		**108V**
Output	Output voltage range	70V-145V
	Max output current	60A
	Output power	6600W@220VAC；3300W@110VAC
	Output way	CV/CC
	Efficiency	≥94%
	CV accuracy	
	CC accuracy	±2%
	Ripple voltage coefficient	±5%
	Output voltage rising time	＜5S，overshoot＜10%
	Shut off response time	Current decreased below 10% in 300ms, and decreased to 0A in 500ms

4.3 Low Voltage Output

Low voltage Output	Output way	CV
	Output voltage	12V
	Nominal current	5.5A
	CV accuracy	±2%
	Output Power	≤66W
	Ripple voltage coefficient	≤1%

4.4 Control Interface

	12V wake-up input	≤10mA
	12V wake-up signal output	Max 0.2A
	12V CV	Sleep current≤1mA，peak current≤5A

	CAN Communication	yes
	Baud rate	Optional for 125Kbps、250Kbps、500Kbps
	Terminal resistance	Not available

4.5 Other

EMI	Meet GB/T 18487.3-2001 11.3.1 and GB/T 18655-2018
EMD	Meet GB/T 18487.3-2001 11.3.2 and GB/T 18655-2018
Harmonic current	Meet GB 17625.1-2003 6.7.1.1
Protection level	IP67
Vibration resistance	10~25Hz swing 1.2mm，25－500Hz 30m/S²，8hours each direction
Noisy	≤65dB （Class A）
MTBF	150000H

5. Charger Protection Functions

Protectio n unctions	Input over-voltage protection	AC270±5V
	Input low-voltage protection	AC85±5V
	Output over-voltage protection	Stop output when exceed the highest voltage ±5V
	Output low-voltage protection	Stop output when below the lowest voltage ±5V
	Over-temperature protection	Power start to decrease when internal temperature rise to 85℃, shut off when rise to 90℃
	Output short circuit protection	Stop output
	Output polarity reverse protection	yes
	Grounding protection	≤100mΩ
	CAN Communication protection	Automatically stop output when CAN communication fails
	Power-off protection	Yes

6. Function block diagram

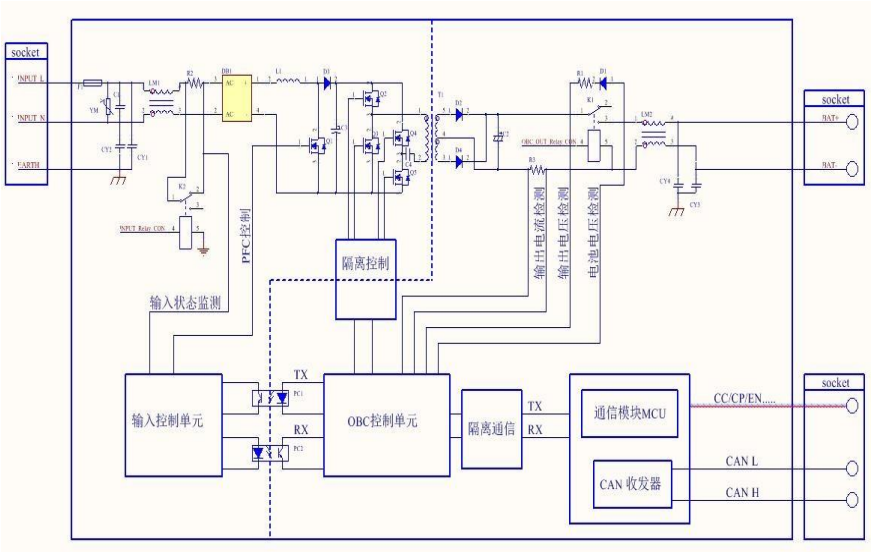

7. Control Interface

The interfaces in the charger can be grouped into two categories, one category is low voltage interface, the other is high voltage interface.

Low voltage interface includes control connector

High voltage interface includes AC220V input, DC output and HIVL

Connectors can be appointed by customer if quantity order is more than 5000pcs.

7.1 Low Voltage Connector and Pins Definition

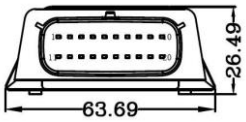

Brand	Pin	Definition	Name	Description
Molex	1	Thermistor 1-1	Charging gun L line temperature sensor 1-1	Temperature detection resistor signal detected by OBC, voltage 5V, current＜ 5mA
	2	Thermistor 1-2	Charging gun L line temperature sensor 1-2	
	3	Thermistor 2-1	Charging gun N line temperature sensor 2-1	
	4	Thermistor 2-2	Charging gun N line temperature sensor 2-2	
	5	CC signal	Connection Confirm	Connection confirmation signal, used to detect whether the charging gun is connected to the vehicle, voltage 5V, current ＜ 10mA

6	CP signal	Control Pilot	Used to detect the maximum current allowed by the charging station and to check the reliability of the connection between the vehicle and the charging station
7	KL30 constant power input positive	Constant power supply input positive	Constant power supply input 9-16V, peak current 3A (when electronic lock is engaged), time 1.5s, sleep current ≤ 1mA
8	Electronic lock power supply+	Electronic lock locking power supply+ Electronic lock unlocking power supply-	Electronic lock drive, voltage 12V, peak current 2.9A
9	N/A		
10	12V 5A Positive	OBC low voltage power output+	Controlled output voltage of 13.8V, maximum long-term output current capability 5.5A
11	CAN-H	CAN communication high-end	
12	CAN-L	CAN communication low-end	
13	HVIL+(High Voltage Internal Lock+）	High voltage connector interlock signal 1	Optional vehicle detection or charger detection, check whether the high-voltage DC connector is reliably connected, with a maximum voltage of 12V and a current not exceeding 0.1A
14	HVIL- (High Voltage Internal Lock-）	High voltage connector interlock signal 2	
15	Electronic lock feedback line-(K/E)	Electronic lock feedback line	Electric lock in-place signal detection, maximum current 0.5mA
16	Electronic lock feedback line+©	Electronic lock feedback line	Electric lock in-place signal detection, maximum current 0.5mA
17	GND	Shared negative for KL31 constant power supply- and 12V5A-	Constant input negative pole, can be connected to the OBC grounding position according to customer requirements, voltage 0V, peak current 5A
18	Electronic lock power supply-	Electronic lock locking power supply-	Electronic lock driver-, 12V voltage, maximum peak current 5A

			Electronic lock unlocking power supply+	
	19	/		
	20	/		
Socket	348302001			
Plug	334722006			

7.2 High Voltage Connectors and Pins Definition

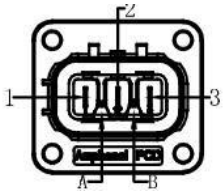

7.2.1 AC Input

Brand	Pin	Definition
Amphenol	1	Null(N)
	2	Ground(PE)
	3	Live(L)
	A,B	HVIL

7.2.2 OBC Output

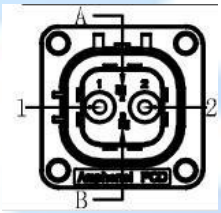

Brand	Pin	Definition
Amphenol	1	Positive
	2	Negative
	A、B	HVIL

8. Software requirements

8.1 CAN communication

No.	Items	Technical indicators	Notes

1	Baud rate	250Kbit/s OR 500 Kbit/s	/
2	CAN bus communication protocol	Comply with CAN2.0B specification	/
3	Terminating resistor	No terminating resistor	/

9. Mechanical requirements

9.1 Size and weight

	Length（mm）	Width（mm）	Height（mm）	GW（KG）
Fan-cooled	312.8±3	268.36±3	111.2±3	≤8

9.2 Appearance

Fan-cooled

9.3 Appearance requirements

The surface of the part should be smooth, free from defects such as delamination, rust, cracks, spots, burrs, deformation, and hand-accessible bumps. The connecting parts are complete, the parts are securely fastened, and there are no defects and damages such as rust, burrs and cracks. The connector sheath and pins should be intact and free of damage, and the components must be fastened

10. Installation size

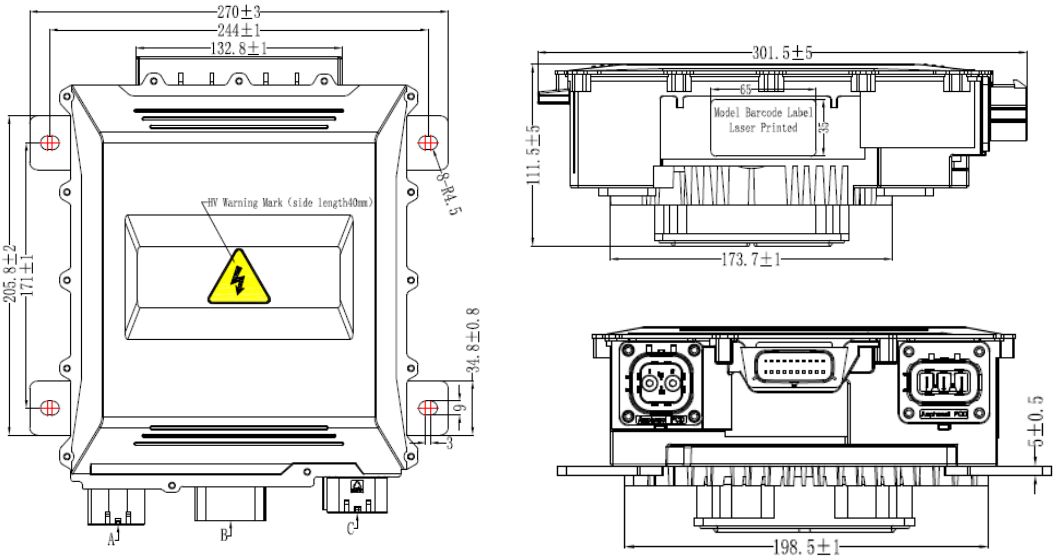

11. Installation requirements

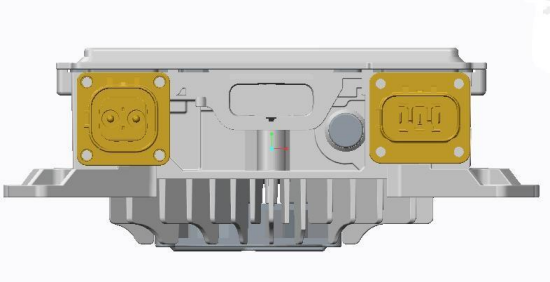

Best way to install

(At least 50mm distance off to any obstacle)

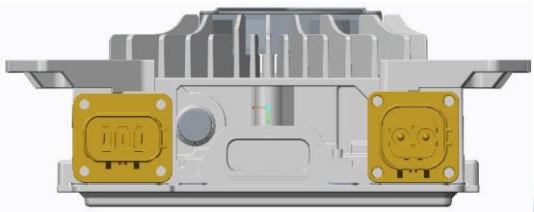

Forbidden way to install

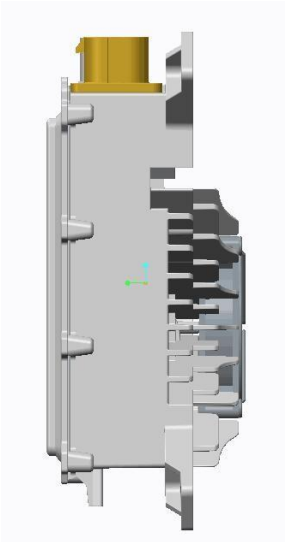

Acceptable way to install

12. Nameplate, Package, Transport and Storage

12.1 Nameplate

Require information in the nameplate shall be traceable

The basic parameters of the nameplate include: model, rated voltage, rated power, production date, serial etc.

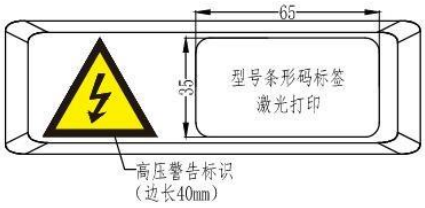

High Voltage Label for reference

Nameplate sample is as following:

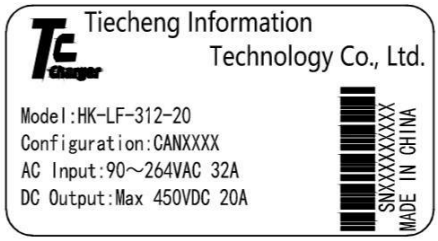

12.2 Package

The packing box shall be provided with product name, model, manufacturer identification, inspection certificate of the manufacturer's quality department, manufacturing date, etc; There is a list of accessories in the packing box:

No.	Item	Qty	Unit	Remark
1	On-board Charger	1	pc	
2	Outboard bill	1	pc	

12.3 Transportation

The product shall be transported in a firm packing box, which shall comply with the provisions of relevant

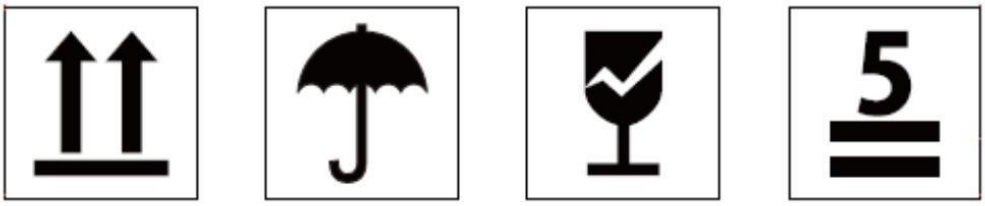

national standards and shall be marked with "handle with care" and "moisture-proof". The packaging box containing the product can be transported by various means of transportation. Direct rain and snow and mechanical impact shall be avoided during transportation.

12.4 Storage

The products shall be stored in the packing box when not in use. The ambient temperature of the warehouse shall be -10-40 ℃ and the relative humidity shall not be greater than 80%. There shall be no harmful gas, flammable, explosive products and corrosive chemicals in the warehouse, and there shall be no strong mechanical vibration, impact and strong magnetic field. The packing box shall be at least 20cm above the ground and at least 50cm away from the wall, heat source, window or air inlet, The storage period under the specified conditions is generally 2 years, and the inspection shall be carried out again after more than 2 years.

The product shall be stored in a ventilated and dry place. At the same time, high temperature sources, fire sources and chemicals must be avoided. Store neatly to avoid throwing.

12.5 Safe Guide

Warning: remind the user that the operation is dangerous

* It is strictly prohibited to disassemble and refit the on-board charger for repair or commissioning
* Do not place the parts in the rain
* Please confirm that the housing is intact before installation. If it is damaged, please replace it immediately or contact the after-sales service department
* All plugs and sockets shall be connected firmly. If they are damaged or loose, please replace them immediately

*It is strictly prohibited to plug and unplug the connector when the product is powered on, otherwise personal injury may be caused

*It is strictly prohibited to open the product shell during the power on operation of the product, otherwise personal injury may be caused

* It is strictly forbidden to touch the high-voltage live parts of the product with bare hands. Please wear insulating gloves, insulating shoes Insulating clothing, live maintenance and detection are strictly prohibited

*During the replacement of fuses and contactors, barbaric operation is strictly prohibited to avoid damaging the product and causing potential safety hazards

* Three core cable with grounding wire shall be selected for AC power supply, and the grounding wire
* Please unplug the power plug if there is abnormal sound or smell during the operation of the charger * Please keep away from fire sources and inflammables and explosives when the battery is normally charged
* Do not charge damaged or non rechargeable batteries

Note: remind the user that the following operations are important operations of the product

* Do not block the air inlet and outlet of the charger to prevent overheating
* Please make sure that the output cable is not too long to avoid the impact of line voltage drop on charging
* Please disconnect the power cord and charging plug when moving the charger
* The battery voltage must be consistent with the nominal voltage of the charger
* Avoid collision, compression, pulling, twisting or shaking the charging cable
* The product should be placed in a safe, ventilated, dust-free and rain free environment
* Please pack and store if not used for a long time